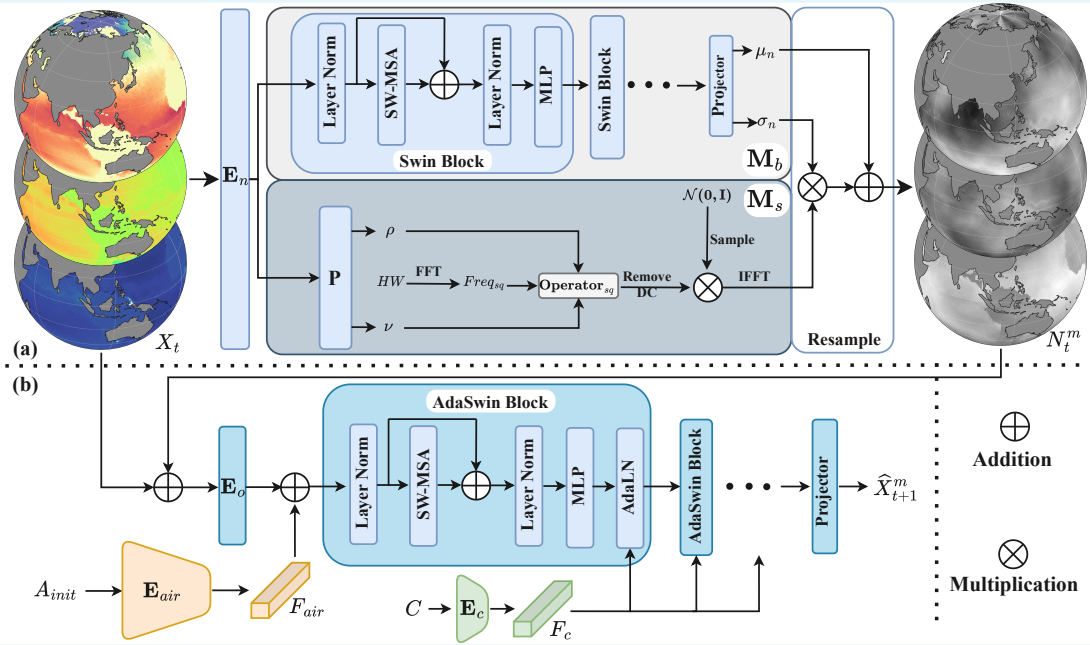
(a)
X_t
$\mathbf{E}_n$
Layer Norm
SW-MSA
Layer Norm
MLP
Swin Block
Swin Block
Projector
μ_n
σ_n
$\mathbf{M}_b$
$\mathbf{M}_s$
$\mathcal{N}(\mathbf{0},\mathbf{I})$
Sample
P
ρ
ν
HW
FFT
$Freq_{sq}$
Operator_{sq}
Remove DC
IFFT
Resample
N_t^m
(b)
AdaSwin Block
$\mathbf{E}_o$
Layer Norm
SW-MSA
Layer Norm
MLP
AdaLN
AdaSwin Block
Projector
$\widehat{X}_{t+1}^m$
A_{init}
$\mathbf{E}_{air}$
F_{air}
C
$\mathbf{E}_c$
F_c
Addition
Multiplication